REF 15-4296BLK
15-4296IB

CanDo®

Hi-Lo Treatment Table, 3 Section

Instructions for Use

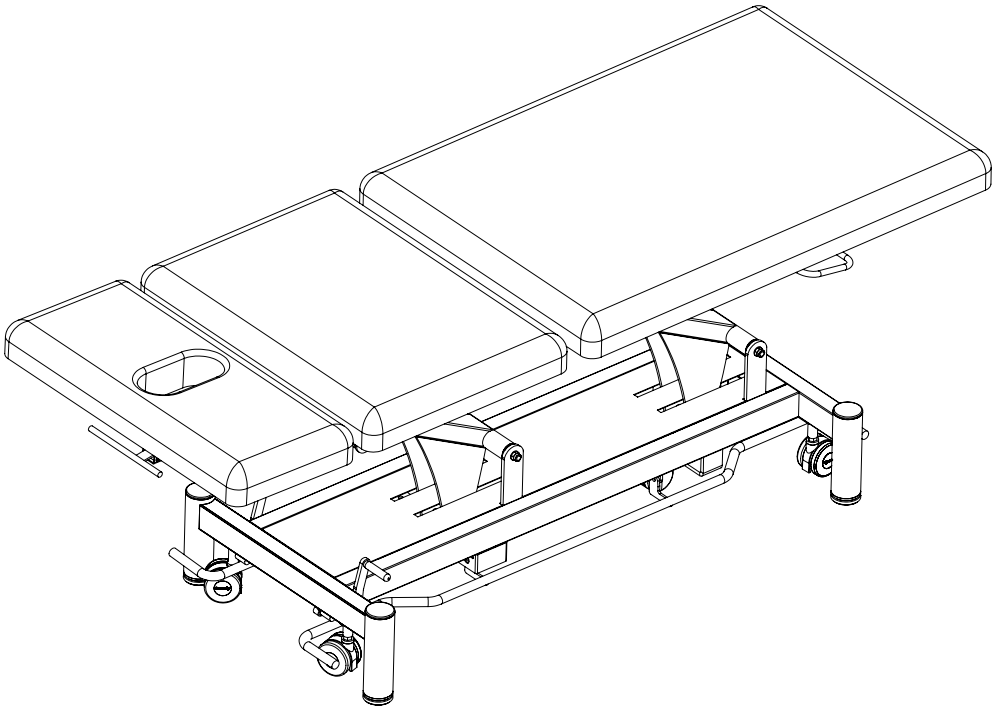

SAFETY PRECAUTIONS

1. During the adjustment of the table, do not put any part of the body into the gap of any moving parts.

2. Please operate with both hands when adjusting the leaning angle of back, foot or head sections.

3. When the patient is on the table, it is not recommended to adjust the angle of the table top.

4. Before using the product, ensure the four feet of the table frame touch the ground at the same time and check the stability of the table frame.

5. Before connecting to the power supply, please check whether the incoming line to the controller is intact.

6. A regular inspection (at least once a year) is needed for the treatment table.

7. Do not exceed the table weight capacity of 551 lbs (250 kg) The safe working load of the arm rest is 33 lbs (15 kg)

8. Always clean the table after each use with a soft cloth dampened with water and a mild antibacterial detergent. Do not use abrasive cleaners.

9. Disconnect the table from the power source before attempting any maintenance, installation, removal or replacement procedures to prevent electrical shock and possible damage to the table.

10. Please DO NOT make any changes to the table. Replacement parts or labor furnished can be provided by FEI, the selling dealer or a service technician certified by the manufacturer.

CONTENTS OF CARTON

Electrical Treatment Table: 1 unit
User Guide: 1 unit

NORMAL OPERATING CONDITIONS

Temperature: 32°F - 104°F (0°C - 40°C)
Relative humidity: 10% - 95%
Air pressure range: 25.4-31.3 inHg (860-1060hPa)
Power supply: AC 100-240V, 50/60Hz

REGULATION AND PRODUCT STANDARDS

This table complies with the European regulation of medical devices (EU) 2017/745 and with the following standards:

- EN 60601-1:2006+A1:2013+AC:2014

  Medical electrical equipment. Part 1: General Requirements for Basic Safety and Essential Performance.

- IEC/EN 60601-2-52:2009+A1:2015 clause 201.9.8.3.2

  Medical electrical equipment. Part 2-52: Particular requirements for basic safety and essential operation of medical tables.

- EN 60601-1-6:2010+A1:2015

  Medical electrical equipment. Part 1-6: General Requirements for basic safety and essential performance. Collateral standard: Possibility for use

- EN 60601-1-2:2015

  Medical electrical equipment. Part 1-2: General requirements for basic safety and essential performance. Collateral standard: Electromagnetic disturbances. Requirements and tests.

- EN ISO 13485:2016
  Medical devices - Quality management systems - Requirements for regulatory purposes (ISO 13485:2016)
  DIN EN ISO 13485:2016

PRECAUTIONS AND SAFETY INDICATIONS

FEI is not liable for any material or personal damage due to misuse or incorrect use of this table or for any purpose other than described in this user guide.

Inspect the condition of the table before using it for the first time and on a recurring basis as indicated in the “MAINTENANCE” section.

Keep table out of high moisture environments.

Do not transport the table over rough or outdoor surfaces. The retractable caster system could become damaged and inoperable.

This table should be operated, transported, and stored in temperatures between 14°F to 122°F (-10°C to + 50°C), with max humidity of 95%.

DO NOT operate this table in an environment where other devices are being used that intentionally radiate electromagnetic energy in an unshielded manner. Portable and mobile communications equipment can affect Medical Electrical Equipment.

This table generates, uses, and can radiate radio frequency energy and, if not installed and used in accordance with the instructions, may cause harmful interference to other devices in the vicinity. However, there is no guarantee that interference will not occur in a particular installation. Harmful interference to other devices can be determined by turning this table on and off. Try to correct the interference using one or more of the following: reorient or relocate the receiving device, increase the separation between the equipment, connect the table to an outlet on a different circuit from that which the other device(s) are connected, and consult FEI or your local dealer for help.

Unplug the table from the power supply before starting cleaning or any type of maintenance operations.

The table should be kept out of the reach of children when there is no adult supervision.

The table is designed for discontinuous interval operation, so the continuous running time of the motor should never exceed 2 minutes. Should this happen, damage may occur due to overheating of the electronics.

Always use original accessories and spare parts provided by your local dealer.

Always cover the table with a towel, disposable paper or a cover and change it for each user, thus ensuring correct hygiene and extending the useful life of the upholstery.

Only connect the table to a properly installed and grounded outlet. The outlet voltage must correspond to the technical data of the device.

The power outlet should be accessible in case the table needs to be quickly unplugged at any given time. Always pull the plug and not the cable.

Unplug the table from the power supply before starting cleaning or any types of maintenance operations.

TECHNICAL SPECIFICATIONS

Product dimensions
Length: 78 in (1980mm)
Width: 30 in (760mm)
Lifting range of bed surface: 17 - 36.6 in (430 - 930mm)
Included angle between head plate and horizontal plane: -90° to 45°
Included angle between leg plate and horizontal plane: 0° to 85°

If the electrical supply cable is defective, disconnect the table immediately and inform your dealer or a specialized technician.

Position the power cord properly so that it cannot be tripped over.

Unplug the power cord from the outlet if the table is not going to be used for a long period of time.

If you detect any abnormality in the operation of the table, consult your dealer or a specialized technician.

Never manipulate any electrical part or open or repair any part of the table.

Only your dealer or a specialized technician should repair the table.

Never touch the table or the power cord with wet hands.

Never place your hands or any other part of your body in any hole or void on the table while it is in operation.

Make sure there are no objects in the space under the table that could cause collisions or entrapment during operation.

Make sure that your feet are not resting on the peripheral foot bar or foot control during treatment and especially when sitting near the table. This could create a dangerous situation where your leg is caught between the section and the peripheral foot bar or floor surface.

Take into account the weight distribution on the table when working. The weight must be distributed along the table without concentrating on its ends to maintain the correct stability.

You should not sit on the head and foot sections.If you do,there is a danger of tipping and table damage.

PLACEMENT IN THE WORKPLACE

The table has four casters to facilitate movement to the place where it will be used.

OPERATION

Moving and adjusting the table

The casters are controlled by a control rod on the table frame.

● Push the control rod down (it is recommended to use your feet to push) to activate the casters. When the casters are on the ground the table is in a moving status.(Figure 1)

● Push the control rod up (it is recommended to use your feet) and the casters are in the retracted status.

When the casters are retracted the table is in a fixed position.(Figure 1)

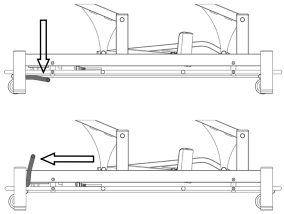

Figure 1 Control rod

Adjustable feet for height adjustment are installed on the four legs of the table. Every time after moving, please make sure that the four adjustable feet are in full contact with the ground, otherwise you should rotate the adjustable feet to adjust.(Figure 2)



Figure 2

Lifting the table

Foot bar under the table is for height adjustment. (Figure 3)

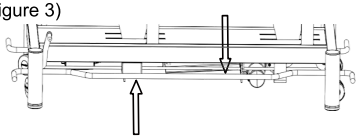

Figure 3

The height adjustment is done by means of a foot-controlled frame located at the bottom of the table. To elevate table, pushing down the foot controller frame. To lower it, pulling up the foot controller frame. The actuator switches off automatically when the table reaches it minimum or maximum position.

The up and down of the foot bar can adjust the height of the bed surface within the range of 17 ~ 36.6 in (430 ~ 930mm), as shown in the Figure 4.

Before operation, please confirm that there are no objects in the space under the bed.

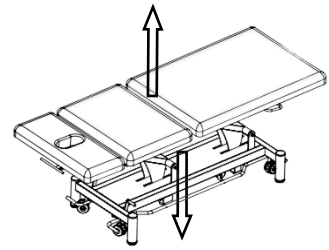

Figure 4

In order to reduce the risk of injury caused by the patient rolling off the table when unattended, the table should be placed at the lowest level.

Head angle adjustment

As shown in the Figure 5, pull the control lever (in the direction shown by the arrow) to adjust the horizontal angle of the head section. The angle range is -90° to 45°

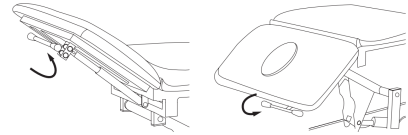

Figure 5

Adjusting the back section

To raise the back section of table, depress the gas spring system and push the back section up to the angle you want.

To lower the back section, depress the gas spring system and glide the back section down to the angle you want. The angle range is 0° to 85°.

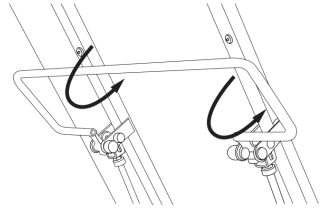

Figure 6

Legend to symbols and information on the product label.

- **Model**: Product identification.
- **Model Num.**: Product version.
- : CE conformity marking.
- MD : Medical Device
- SN : Unique serial number identifying the product.
- : Date of manufacture.
- **Product Net Weight** : Table weight in kg.
- **INPUT** : Necessary values of the electrical mains supply.
- **ON: 2 min / OFF: 18 min:** Indicates the discontinuous operation of the device according to IEC/EN 60601-1, which indicates that 2 minutes of continuous operation of the motor or motors should not be exceeded.
- : Consult the instructions for use or the user guide.
- : Maximal load capacity that the table can support.
- : Maximum patient weight.
- : Waste from Electrical and Electronic Equipment. Selective waste collection of electrical and electronic equipment is required.
- : Classification of medical electrical equipment - Double Insulation.
- : Electrical Safety Classification - Type B.
- IPX4 : Protection against splashing water or liquids.
- : Manufacturer identification.
- EU REP : Authorized representative in the EU.
- : Importer.

TROUBLESHOOTING

If, during the life of the table you detect any malfunction or need a repair, contact your dealer and do not use the table until you have received a diagnosis or the table has been professionally repaired.

MAINTENANCE

Carry out a visual inspection at least once a month to check the general conditions of the table. Moreover, you must do the following:

- Check the correct adjustment of the different sections.
- Check the proper functioning of the motors and their movements.
- Check and clean the gas struts
- Check and tighten screws (if necessary).
- Grease the parts with friction.
- Check the conditions of the electrical wiring and the socket.
- Check the wheel immobilization system.

RECYCLING

If you need to dispose of the table or any of its parts or accessories, consult and respect the laws and regulations applicable to waste management and protection of the environment.

WARRANTY

This warranty shall remain in effect for 5 years (60 months) for the structure and 3 years (36 months) for the base frame and motor from the date of original consumer purchase. An original sales receipt or proof of purchase may be required in order to redeem the warranty.
All repairs to the Product must be performed by a service center certified by FEI. Any modifications or repairs performed by unauthorized centers or groups will void this warranty. This statement of guarantee prevails over any other statement specified or implied by the seller.

CLEANING AND DISINFECTION

Before cleaning the table, unplug it from the outlet. Clean the table after each use.

Dust the table with a soft, dry cloth.

To clean the upholstery, apply a solution of warm water and a mild detergent (for example, neutral soap) with a well wrung soft cloth. Wipe the table over once cleaned.

Disinfect upholstery and other surfaces with a suitable bactericide for this purpose.

Apply the disinfectant on a soft cloth, never directly on the table.

Never use a mixture of disinfectants or a mixture of disinfectant and soap.

Wipe the table upholstery over once cleaned & disinfected with a cloth and water only. This will remove any residue from the upholstery.

Avoid the accumulation of moisture on the moving parts of the metal structure, as they could rust.

Since we do not know which disinfectant will be used, we cannot guarantee that it will not cause damage to the upholstery. Read the instructions and warnings for use of the disinfectant product carefully before its purchase or use.

TRANSPORTATION AND STORAGE CONDITION

Transport condition

The products can be transported by general means of transportation. They should be protected from the sun and rain, and should not be mixed with toxic, harmful and corrosive materials.

Storage

The packed electric multifunctional physiotherapy bed should be stored in a dry and well ventilated environment without corrosive gas.
This table should be operated, transported, and stored in temperatures between 4°F to 122°F (-10°C to + 50°C) with max humidity of 95%.

SHUTDOWN PROCEDURE

Adjust the bed to a suitable position to ensure that the patient is safely left, then turn off the power.

Contraindication

Please note that our beds are not sterilized. Please do not use them according to aseptic standards.

Fabrication Enterprises Inc
250 Clearbrook Road, Suite 240
Elmsford, NY 10523 (USA)
tel: +1-914-345-9300 • 800-431-2830
fax: +1-914-345-9800 • 800-634-5370
FabEnt.com

EU REP MD

AJW Technology Consulting GmbH
Breite Strasse 3
40213 Dusseldorf Germany

MedEnvoy
NL-IM-000000248
Prinses Margrietplantsoen 33, Suite 123
2595 AM, The Hague (NL)

©2026 FEI, all rights reserved. CanDo is a trademark of Goldberg. rev0426